Qtex
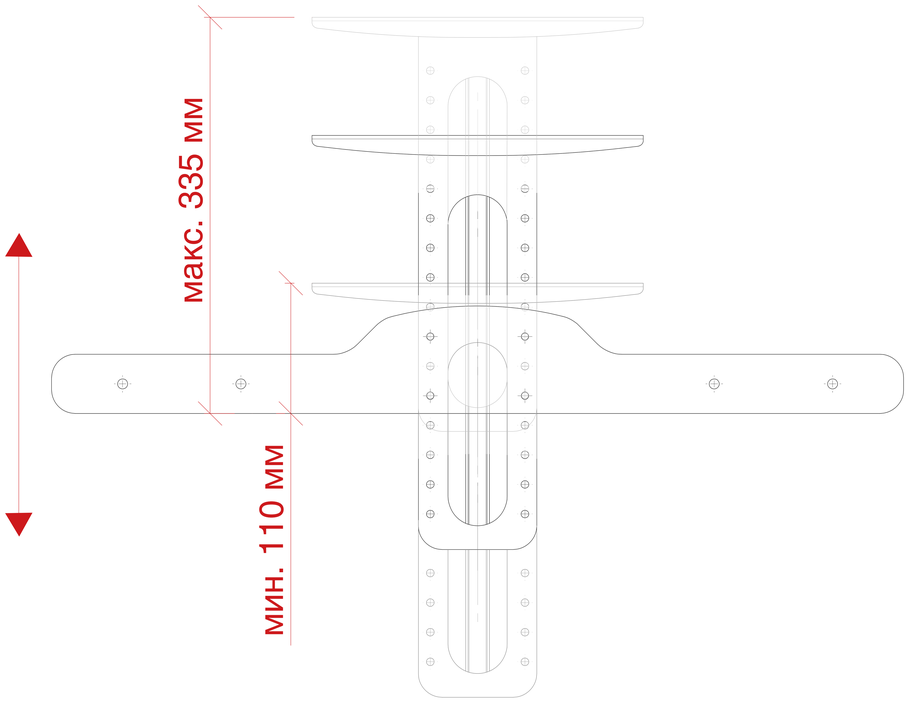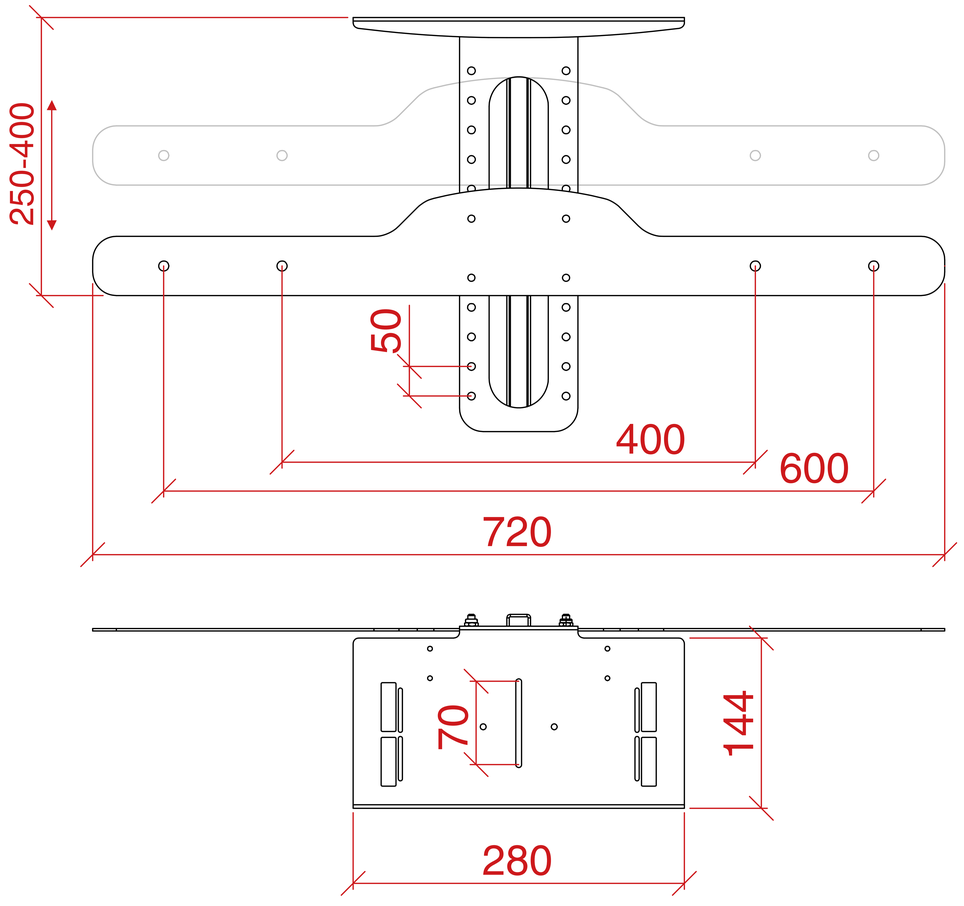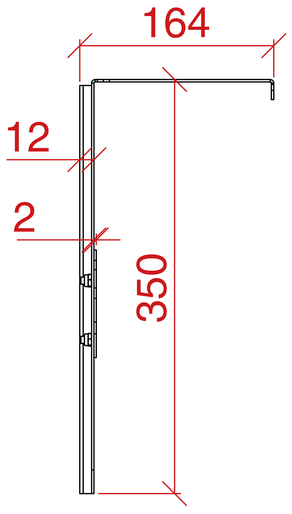
QEC-TVCB/R